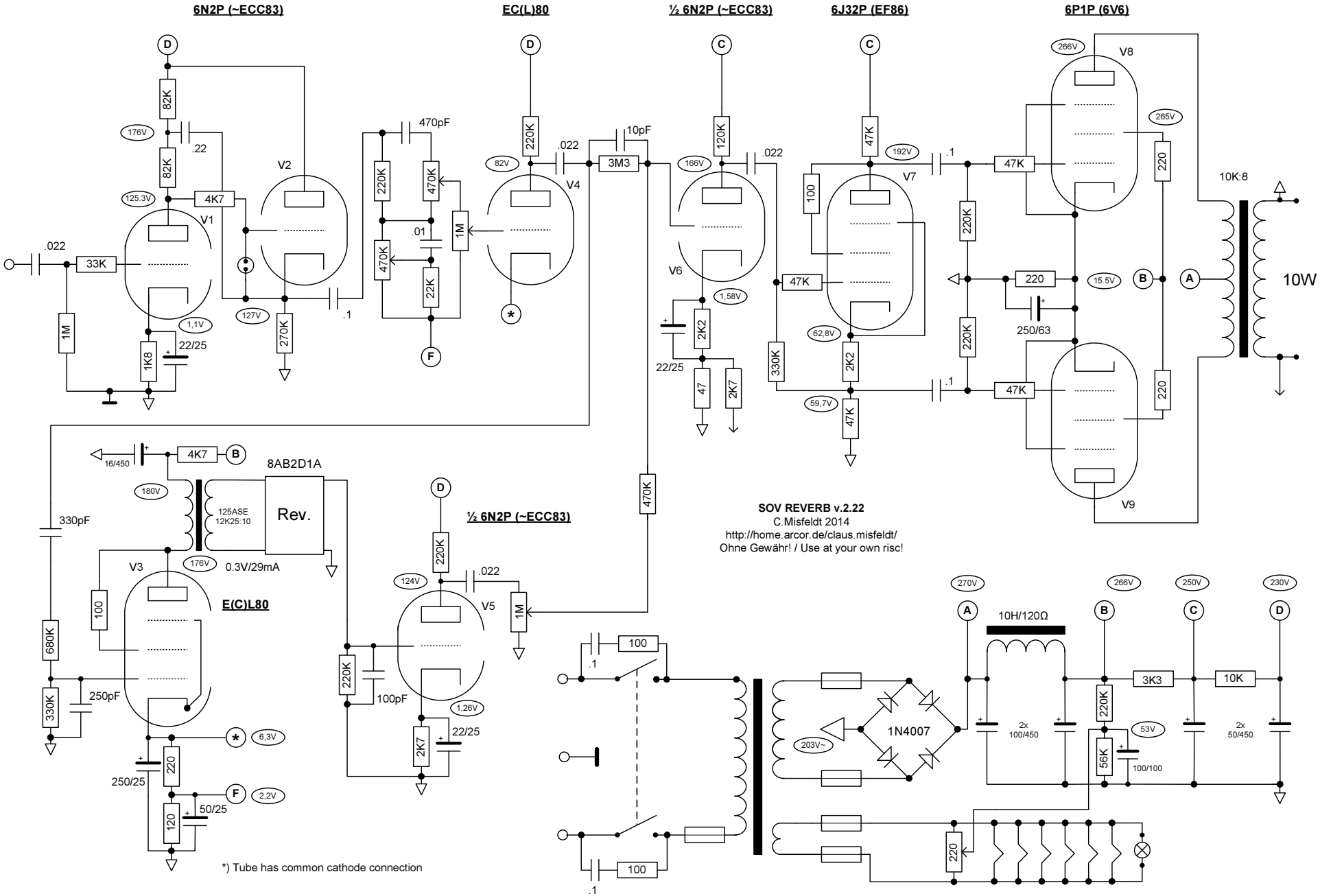
6N2P (~ECC83)
EC(L)80
½ 6N2P (~ECC83)
6J32P (EF86)
6P1P (6V6)
V1
V2
V3
V4
V5
V6
V7
V8
V9
8AB2D1A
Rev.
125ASE
12K25:10
E(C)L80
½ 6N2P (~ECC83)
10K:8
10W
10H/120Ω
1N4007
203V~
SOV REVERB v.2.22
C.Misfeldt 2014
http://home.arcor.de/claus.misfeldt/
Ohne Gewähr! / Use at your own risc!
*) Tube has common cathode connection